REV	DESCRIPTION\PER REQUEST	DRAWN	DATE

Frequency:0~40GHz
VSWR:1.2 Max.

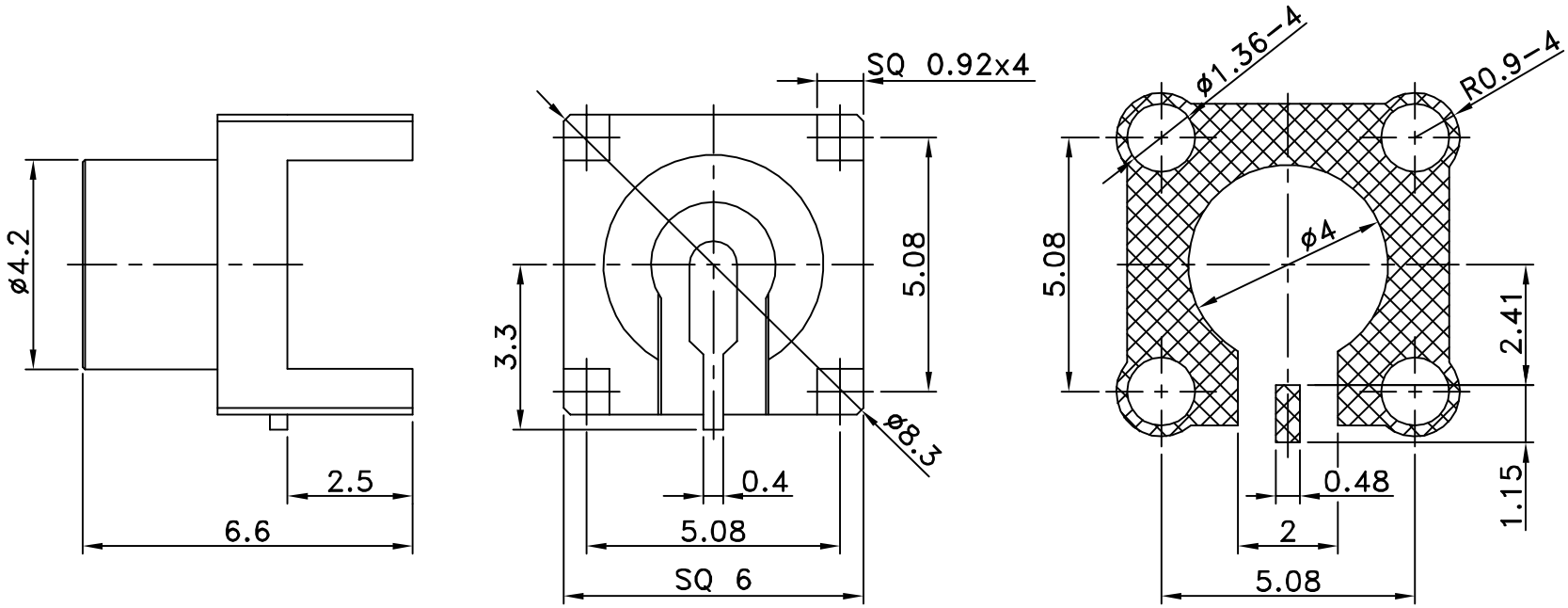

RECOMMENDED
MOUNTING PATTERN

NOTES: FINISH (PLATING THICKNESS IN MICRO-INCHES)
1.GOLD PL. 3 MIN. THICK OVER NICKEL PL. 70 MIN. THICK OVER COPPER STRIKE
2.GOLD PL. 30 MIN. THICK OVER NICKEL PL. 70 MIN. THICK OVER COPPER STRIKE

NO	Description	Q'ty	Material	Finish
3	Dielectric	1	Teflon	None
2	Pin	1	Brass	NOTE 2
1	Body	1	Brass	NOTE 1

PART NO.	2062AL12111
APPROVED	DATE 09/10/12
CHECKED	DATE 09/10/12
DRAWN Kai	DATE 09/10/12

* MAJOR DIMENSION
UNLESS OTHERWISE NOTED TOLERANCES
0.5-6=±0.2
6-30=±0.4
30-120=±0.6
120-315=±1.0
ANGLES=±1°

SCALE 8/1 UNIT mm

Bomar Interconnect Products,Inc

TITLE SMP SMT PLUG(Limited Detent)

DRAWING NO. ASSMP-43002-TGG REV B

FILE NO. W:\AS\ASSMP\ASSMP-43002-TGG Bomar->20120911