DWG. SIZE	DWG. NO.
D	032-7599

REVISIONS

SYM.	E.C.N.	DATE	APVD.

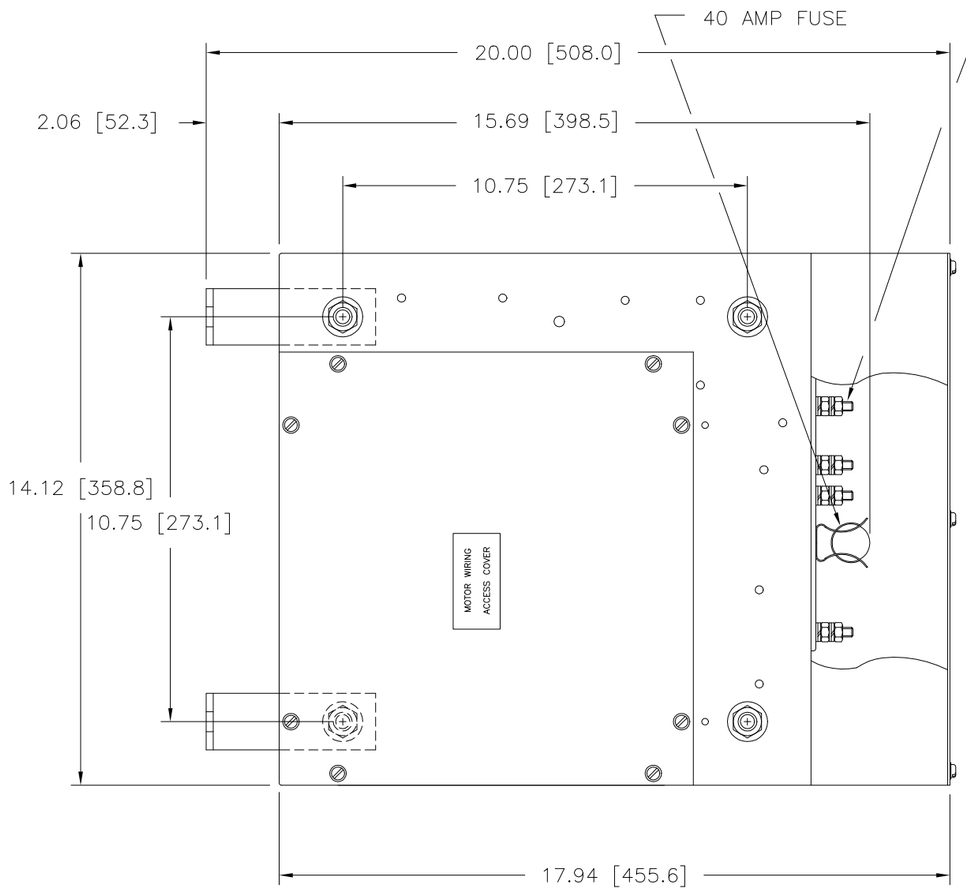

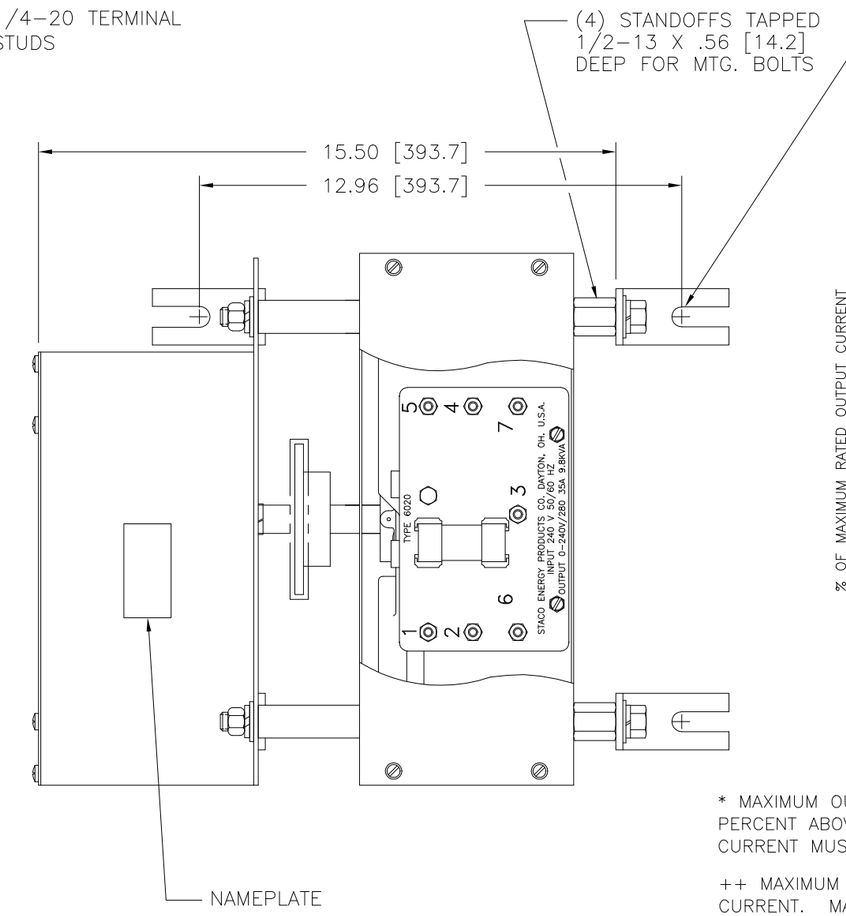

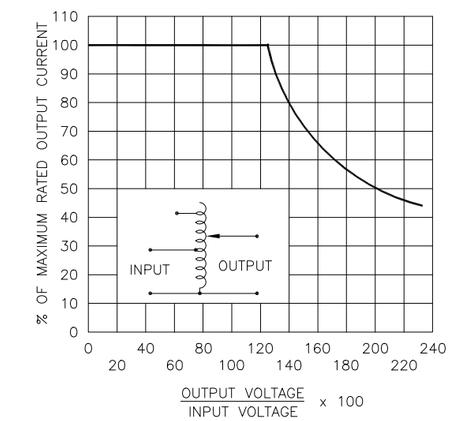

FIGURE A

MAXIMUM OUTPUT CURRENT OF ANY DUAL INPUT VOLTAGE OR VOLTAGE DOUBLER UNIT OPERATED AT LOWER INPUT VOLTAGE.

* MAXIMUM OUTPUT CURRENT IN OUTPUT VOLTAGE RANGE FROM 0 TO 25 PERCENT ABOVE LINE VOLTAGE. AT HIGHER OUTPUT VOLTAGES, OUTPUT CURRENT MUST BE REDUCED ACCORDING TO RATING CURVE (SEE FIGURE A).

++ MAXIMUM KVA AT MAXIMUM OUTPUT AND CORRESSPONDING DE-RATED CURRENT. MAXIMUM KVA AT LOWER OUTPUT VOLTAGES MAY BE CALCULATED FROM RATING CURVE, (SEE FIGURE A).

V.D. = VOLTAGE DOUBLER.

SPEED (SECONDS)	MODEL NUMBER
5	5M6020CT
15	15M6020CT
30	30M6020CT
60	60M6020CT

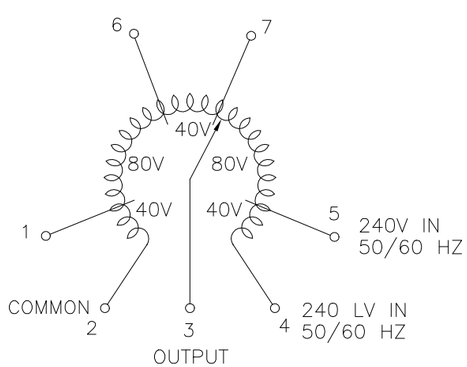

SCHEMATIC

VIEW FROM BASE END

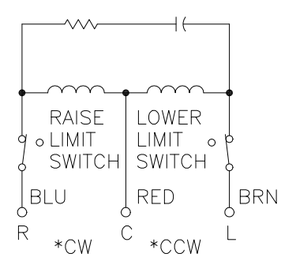

MOTOR CIRCUIT

120V, 50/60 HZ

* ROTATION AS VIEWED FROM MOTOR END

MOTOR SPEED: SEE CHART

SPECIFICATIONS

WIRING	INPUT VOLTS	INPUT HERTZ	OUTPUT VOLTS	OUTPUT MAX. AMPS	OUTPUT MAX. KVA	SHAFT ROTATION FOR INCREASE VOLTAGE	TERMINAL CONNECTIONS FOR INCREASING VOLTAGE AS VIEWED FROM ROTOR END: INPUT	JUMPER	OUTPUT
SINGLE PHASE	240	50/60	0-240	35	8.4	CW	2-4	———	2-3
						CCW	4-2	———	4-3
			0-280	35	9.8	CW	2-5	———	2-3
						CCW	4-1	———	4-3
	120	50/60	0-280	35*-15 V.D.	4.2 ‡	CW	6-2	———	2-3
						CCW	4-7	———	4-3

UNLESS OTHERWISE SPECIFIED. TOLERANCE IS ±
DECIMALS .XX .010 .XXX .005 — HOLES .06 .002 — ANGLES 1° — DRAFT 1-1/2°

UNITS IN [mm]

MATERIAL :

ALL DIMENSIONS APPLY AFTER PLATING

TITLE: SPEC. CONTROL DWG. VARIABLE TRANSFORMER M6020CT

STACO ENERGY PRODUCTS CO.
A COMPONENTS CORPORATION OF AMERICA COMPANY
DAYTON, OHIO U.S.A.

The information and design disclosed herein was originated by and is the property of STACO ENERGY PRODUCTS CO., which reserves all patent, proprietary, design, manufacturing, reproduction, use and sale rights thereto, and to any article disclosed therein except to the extent rights are expressly granted to others. The foregoing does not apply to vendor proprietary parts.

DRAWN BY	DATE	FIRST USED ON	DO NOT SCALE DWG.	CUSTOMER APPROVAL	DATE
F. SEALE	9/23/96				
CHECKER	DATE	WEIGHT APPROX.	CODE IDENT. NO. 83008	DWG. SIZE D	DWG. NO. 032-7599
ENGINEER	DATE	SCALE .5=1	SHEET 1 OF 1		