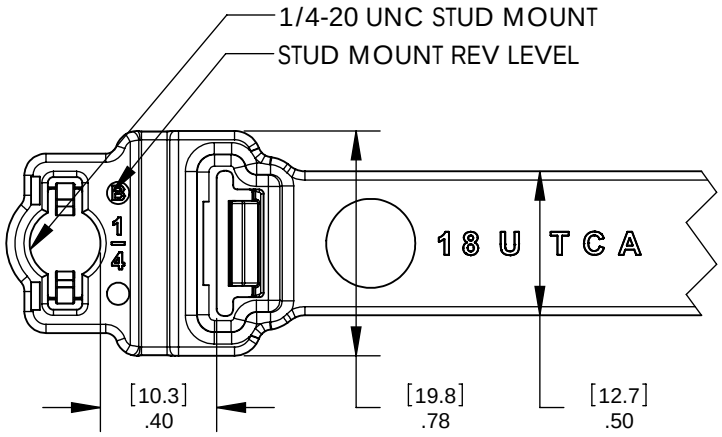

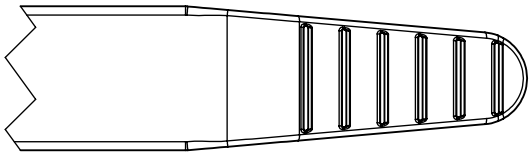

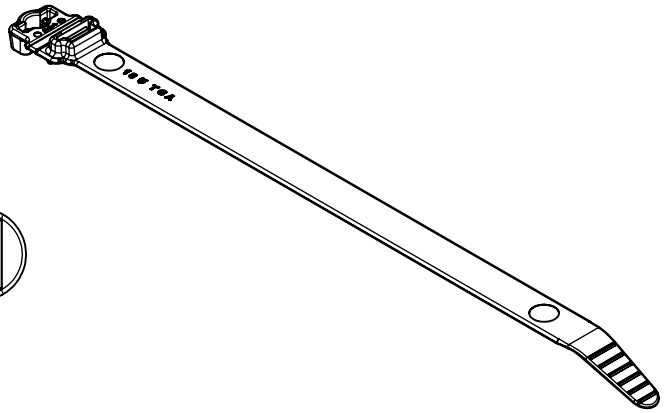

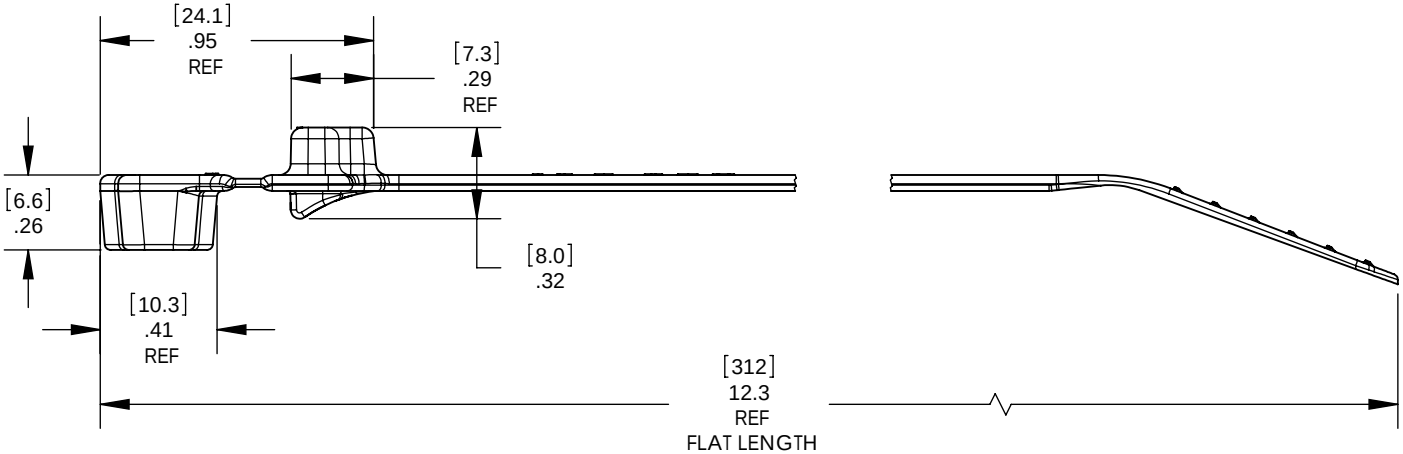

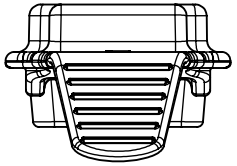

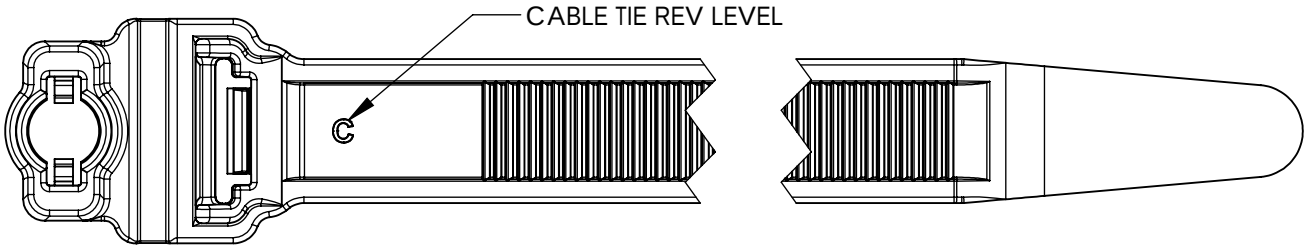

03 **PERFORMANCE REQUIREMENTS (DAM):**

1. .25" STUD PUSH ON FORCE: 20LBS MAX
2. .25" STUD PULL OFF FORCE: 40LBS MIN
3. CABLE TIE TENSILE STRENGTH: 120LBS MIN
4. MINIMUM BUNDLE DIAMETER: .375"
5. MAXIMUM BUNDLE DIAMETER: 3.25"

INVENTORS

HellermannTyton®

ALL PROPRIETARY RIGHTS IN THE SUBJECT MATTER SHOWN ON THIS DRAWING ARE EXCLUSIVE PROPERTY OF HELLERMANNTYTON

name	date	city, state

REVISION

level	03
by	JJP
date	08/25/2008
ECN #	010951
part level	A/C

DIMENSIONS

TOLERANCES
.XXXX = [±.127]/±0.005
.XXX = [±.25]/±0.01
.XX = [±.5]/±0.02
.X = [±6.4]/±0.25
∠ = ±0.5°
unless otherwise specified

units [milimeters]/inches

PART

number	WSI250	phase	Production
name	WIDE STRAP TIE W/ .25" STUD MOUNT		
material	NYLON 6/6, IMHSUV BLACK		

DRAWING

format version N	AH	CAD	SW 2007
scale	3:2		
computer file name	CT06-026-003CST_03	previous drawing number	
drawn	JJP 04/03/2007	checked	GGG 08/09/2007
approved			
type	Customer		sheet 1 of 1
number	CT06-026-003CST		